REVISIONS				
REV. SYM.	E.O.R. NUMBER	DESCRIPTION	BY DATE	APP'D DATE
3		UPDATED PER ECO	B.K. 4-17-98	DE 4-98

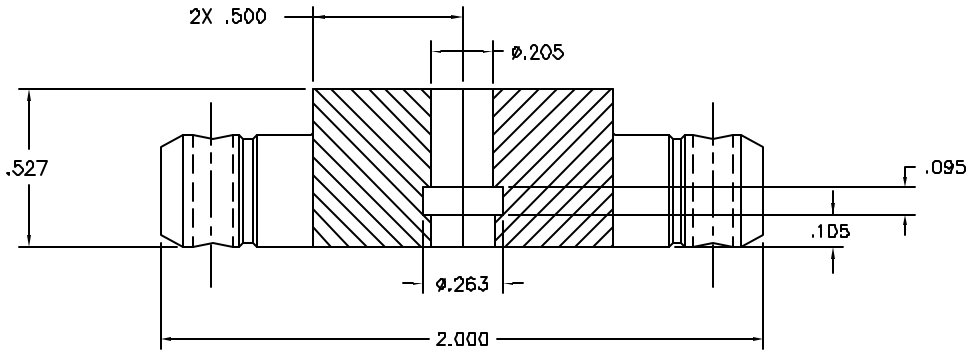

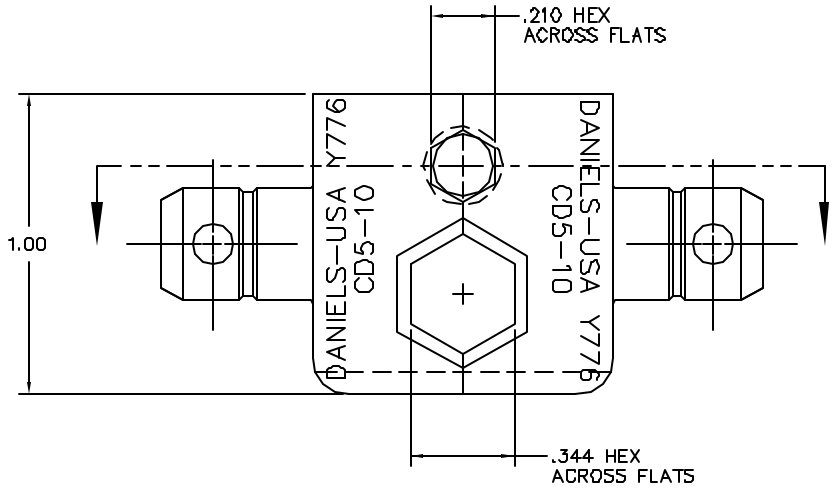

UNCONTROLLED DOCUMENT
WILL NOT BE UPDATED

RESTRICTED & CONFIDENTIAL

CONFIDENTIAL PROPERTY OF DANIELS MANUFACTURING CORP. NOT TO BE DISCLOSED TO OTHERS, REPRODUCED OR USED FOR ANY OTHER PURPOSE, EXCEPT AS AUTHORIZED IN WRITING BY DANIELS MANUFACTURING. MUST BE RETURNED TO DANIELS MANUFACTURING CORP. ON COMPLETION OF ORDER OR OTHER PURPOSE FOR WHICH SENT.

DO NOT SCALE DRAWING

MATERIAL

HEAT TREAT

FINISH

ITEM	PART NO.	QTY.	DESCRIPTION/REMARKS

DRN. B. KILPATRICK DATE 4-17-98
CHK'D. DE DATE 4-98
APP'D. DATE
APPD. DATE

NOTE:
THIS DRAWING IS AN OUTLINE DRAWING OF THE RESPECTIVE DMC PART NUMBER INDICATED. ACTUAL DMC PART NUMBER IS DRAWING NUMBER WITHOUT THE "-ENV" SUFFIX.

DMC DANIELS MANUFACTURING CORP. ORLANDO, FLORIDA CAGE 71851

TITLE
DIE SET
ENVELOPE DRAWING

WHERE USED

SIZE C SCALE 3X CAD FILE NO. Y776-ENV SHEET 1 OF 1

POSTING DWG. NO. Y776-ENV REV. 3