REVISIONS				
REV. SYM.	E.C.O. NUMBER	DESCRIPTION	BY DATE	APP'D DATE
1		ORIGINAL RELEASE	JWJ 4/20/01	RRR 4/20/01

UNCONTROLLED DOCUMENT WILL NOT BE UPDATED

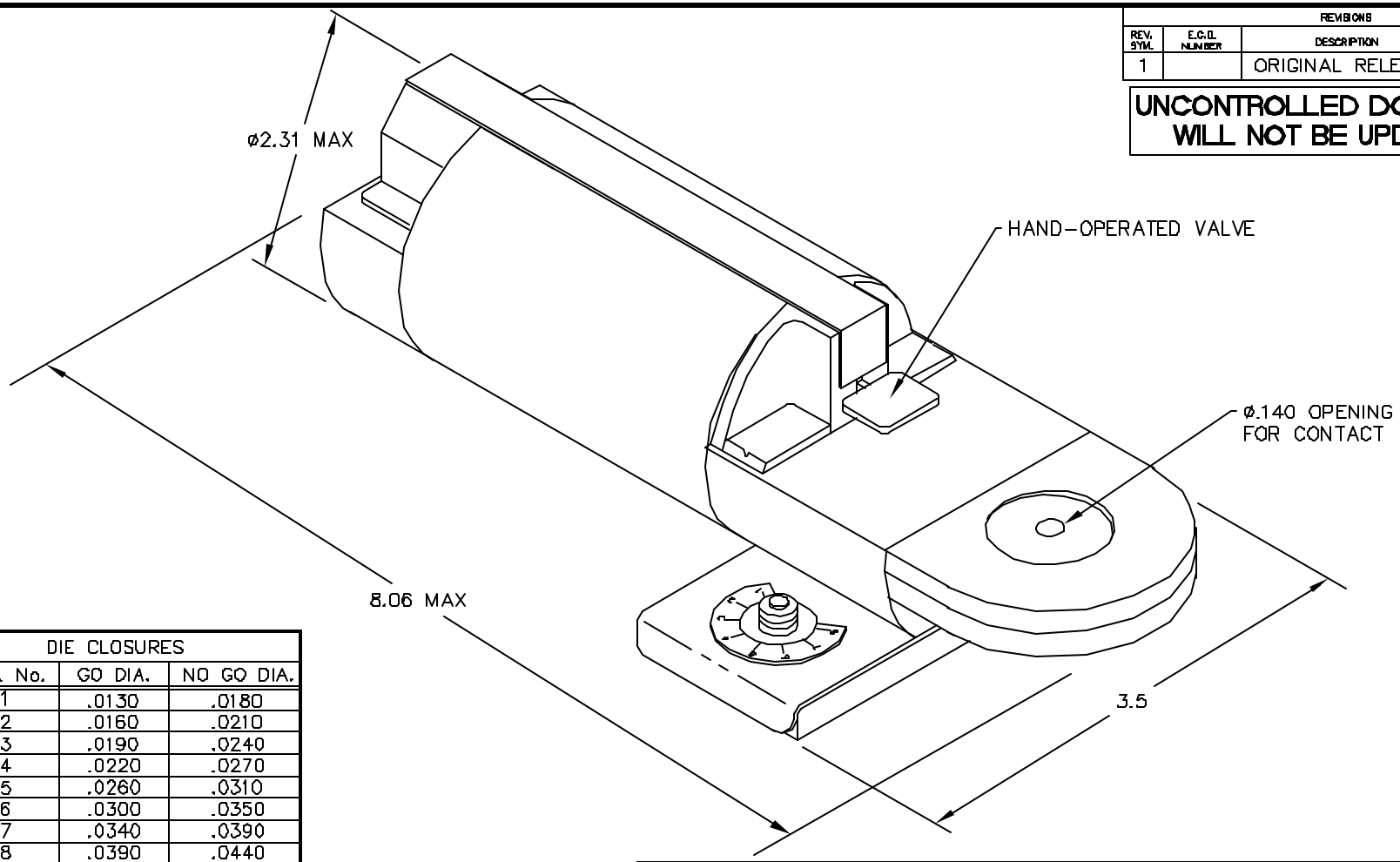

DIE CLOSURES		
SEL. No.	GO DIA.	NO GO DIA.
1	.0130	.0180
2	.0160	.0210
3	.0190	.0240
4	.0220	.0270
5	.0260	.0310
6	.0300	.0350
7	.0340	.0390
8	.0390	.0440
USE GAGE G125 AT SELECTOR SETTING 8		

NOTES:

1. SIDE SELECTOR CAN BE MOUNTED ON EITHER SIDE OF TOOL.

RESTRICTED & CONFIDENTIAL

CONFIDENTIAL PROPERTY OF DANIELS MANUFACTURING CORP. NOT TO BE DISCLOSED TO OTHERS, REPRODUCED OR USED FOR ANY OTHER PURPOSE, EXCEPT AS AUTHORIZED IN WRITING BY DANIELS MANUFACTURING. MUST BE RETURNED TO DANIELS MANUFACTURING CORP. ON COMPLETION OF ORDER OR OTHER PURPOSE FOR WHICH LENT.

DO NOT SCALE DRAWING

MATERIAL

HEAT TREAT

FINISH

ITEM	PART NO.	QTY.	DESCRIPTION/REMARKS

DRN. J. JOYCE DATE 4/20/01

CHK'D. RRR DATE 4/20/01

APP'D. DATE

APP'D. DATE

NOTE: THIS DRAWING IS AN OUTLINE DRAWING OF THE RESPECTIVE DMC PART NUMBER INDICATED. ACTUAL DMC PART NUMBER IS DRAWING NUMBER WITHOUT THE "-ENV" SUFFIX.

DMC DANIELS MANUFACTURING CORP. ORLANDO, FLORIDA CAGE 11851

TITLE PNEUMATIC CRIMP TOOL W/SIDE SELECTOR ENVELOPE DRAWING

WHERE USED:

SIZE	SCALE	CAD P/N	SHEET 1 OF 1
B	NTS	WA22SS-ENV	

POSTING

DWG. NO. WA22SS-ENV REV. 1