REVISIONS				
REV. SYM.	E.C.O. NUMBER	DESCRIPTION	BY DATE	APP'D DATE
1		ORIGINAL RELEASE	JWJ 3/20/99	RRR 3/20/99

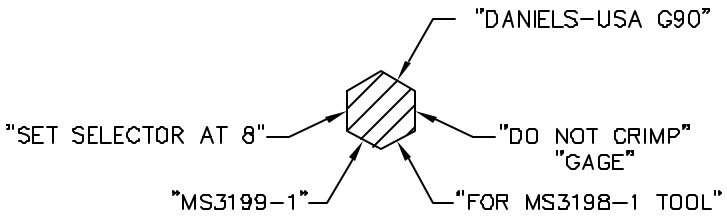

SECTION A-A

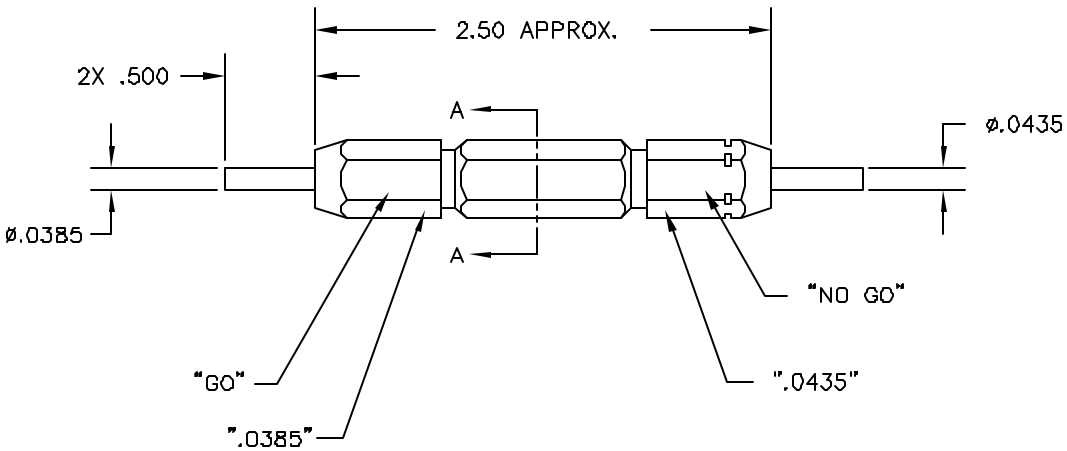

UNCONTROLLED DOCUMENT WILL NOT BE UPDATED

RESTRICTED & CONFIDENTIAL

CONFIDENTIAL PROPERTY OF DANIELS MANUFACTURING CORP. NOT TO BE DISCLOSED TO OTHERS, REPRODUCED OR USED FOR ANY OTHER PURPOSE, EXCEPT AS AUTHORIZED IN WRITING BY DANIELS MANUFACTURING. MUST BE RETURNED TO DANIELS MANUFACTURING CORP. ON COMPLETION OF ORDER OR OTHER PURPOSE FOR WHICH LENT.

DO NOT SCALE DRAWING

MATERIAL

HEAT TREAT

FINISH

ITEM	PART NO.	QTY.	DESCRIPTION/REMARKS

DRN. J. JOYCE DATE 5/20/99
CHK'D. RRR DATE 5/20/99
APP'D. DATE
APP'D. DATE

NOTE: THIS DRAWING IS AN OUTLINE DRAWING OF THE RESPECTIVE DMC PART NUMBER INDICATED. ACTUAL DMC PART NUMBER IS DRAWING NUMBER WITHOUT THE "-ENV" SUFFIX.

DANIELS MANUFACTURING CORP.
ORLANDO, FLORIDA
CAGE 11851

TITLE: G0/NO-GO GAGE (MS3199-1) ENVELOPE DRAWING

WHERE USED:

SIZE B | SCALE NTS | CAD P/N G90-ENV | SHEET 1 OF 1

POSTING | DWG. NO. G90-ENV | REV. 1